OMNICOMM

Omnicomm Smart 3.0 Terminal

User manual

29.03.2024

Contents

4 **General Information**

4 **Installation**

4 Installing a SIM Card

5 **Output Connectors**

6 **Power supply and Ignition key**

7 **Terminal**

8 **General Configuration Information**

8 **Omnicomm Configurator**

9 **Remote Configuration Server (RCS)**

10 **Configuring Operational Parameters**

10 **GPRS Connection**

11 **Collecting Data**

13 **Speed source selection**

13 **Communication Server Connection**

15 **Ignition key status**

15 **Engine RPM**

17 **Accelerometer**

19 **Utility Functions**

19 **Restarting Terminal**

19 **Setting Up Password for Configuring Parameters**

19 **Operational Set-up For Remote Configuration Server**

20 **Identifying Terminal's SIM Card Number**

20 **Additional equipment**

20 **Fuel level sensors**

23 **Universal Inputs**

27 **Omnicomm LLD Indicator**

28 **Panic Button**

29 **CAN bus**

33 **Technical Specifications**

35 **SMS commands**

Omnicomm Smart 3.0 Terminal

General Information

Omnicomm Terminals are the on-board equipment designed to collect data on the state of the vehicle and transmit these data to Omnicomm Online or a third-party fleet monitoring system of choice.

Terminal key functions are:

- Identifying and recording location, speed, and direction of travel of a vehicle;

- Reading and sorting values received from the fuel level sensors and a wide range of other connected equipment;

- Remote control of any additional equipment connected to the system;

- Non-volatile data storage;

- Transmitting data to Omnicomm Online and/or other fleet monitoring system of choice.

Omnicomm Terminal modifications differ from one another by design and type of equipment that can be connected to them. This User Manual describes the Omnicomm Smart Terminal range.

Safety Recommendations

Please take all the necessary safety measures and comply with all relevant standards and regulations when installing the equipment.

Installation

Installing a SIM Card

Before installing a SIM card please disable the PIN code request upon start-up. In order to do that, simply insert the SIM card into any cell phone and disable the PIN code request according to the telephone operating specifications.

1. Use a pointed object to press a button on the Terminal's front panel. This will eject a SIM card holder.

2. Remove the SIM card holder from the slot and install the SIM card in it with the contact side up.

3. Install the SIM card holder back into the slot (see the image below).

It is possible to custom-order an option for installing a SIM chip.

Output Connectors

Omnicomm Smart Terminal

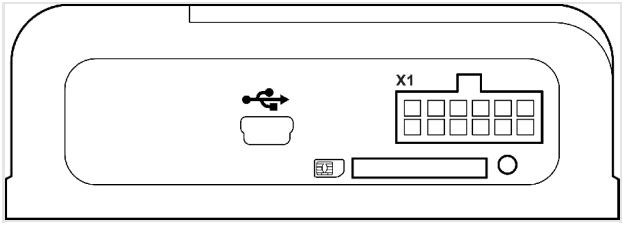

X1 connector:

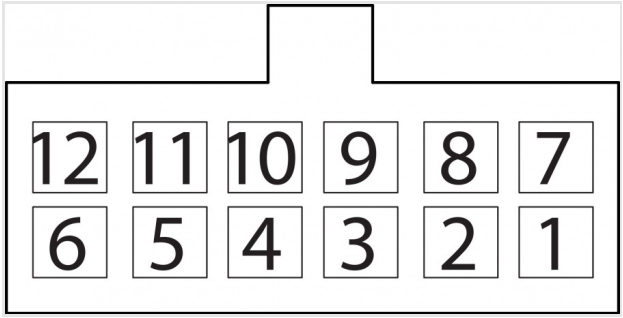

Power supply and Ignition key

Contact number	Signal Name	Designation	Wire Colours Inside Cable
1	Ground (negative) for power supply	General (signal)	White
2	Input RPM	Tachometer	Blue
3	Not used	NC	
4	Not used	NC	
5	Line B: RS-485 LLS	B RS-485 LLS	Blue-white
6	CAN L	CAN L	Violet-white
7	On-board power voltage	Power supply	Red
8	Ignition key	IGN	Yellow
9	Universal input	Input 1	Black
10	Not used	NC	
11	Line A RS-485 LLS	A RS-485 LLS	Orange-white
12	CAN H	CAN H	Violet-orange

Power supply and Ignition key

Perform the connection of Omnicomm Smart 3.0 Terminals without the main switch according to the diagrams below:

Terminal

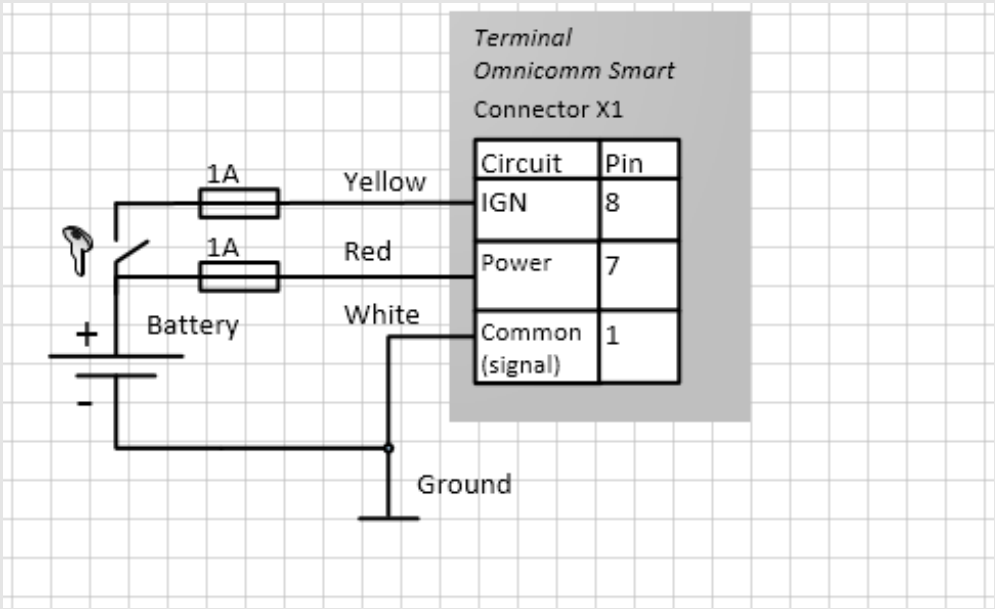

Before the main switch:

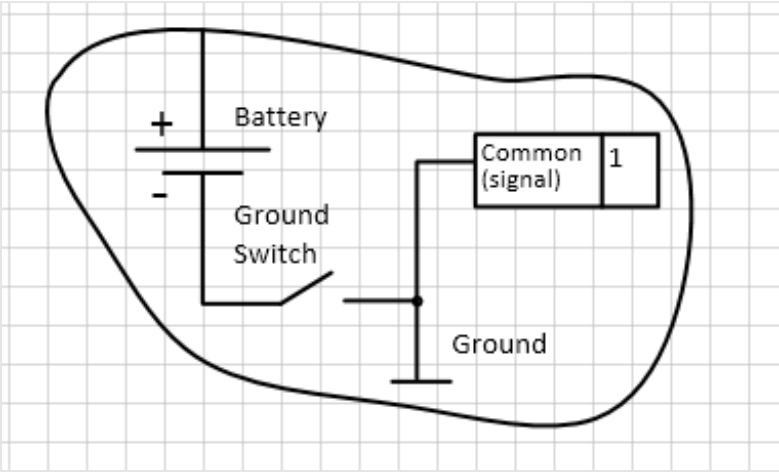

Terminal

The Omnicomm Terminal must be installed inside the vehicle cabin or inside a specially designed electrical equipment box: weather- and precipitation-proofed and fixed on the vehicle. Drill 4 mounting holes, 4 mm in Ø.

Here is an example for Omnicomm Smart Terminals:

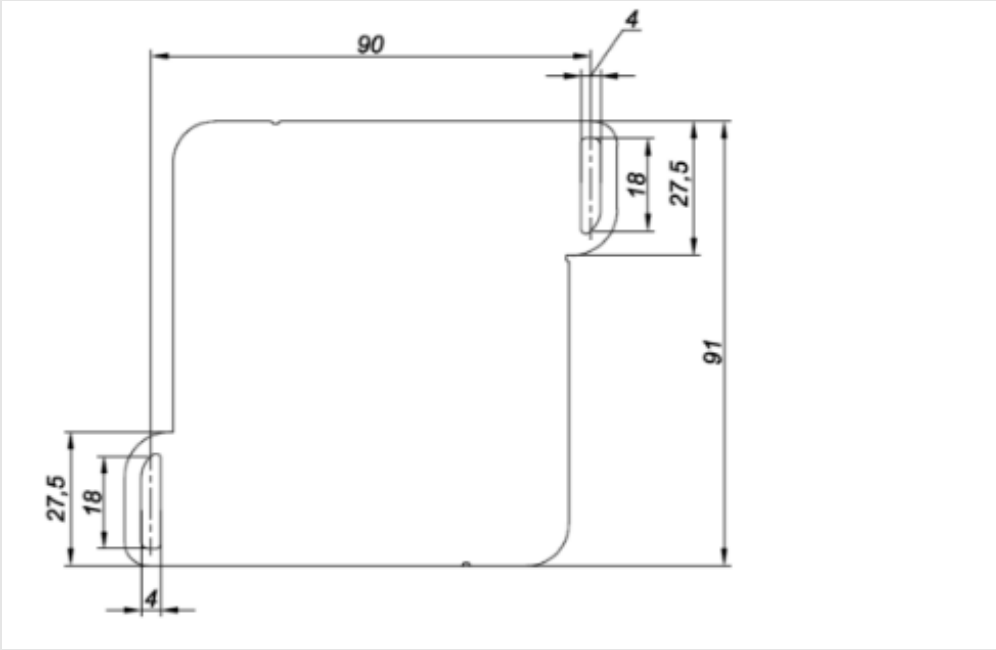

Install the Terminal and fix it by using self-tapping screws.

General Configuration Information

Omnicomm Configurator There are two ways to configure Omnicomm Terminals: 1. Via the Omnicomm Configurator upon connecting the Terminal to a personal computer; 2. Via the Remote Configuration Server (RCS).

Initial Terminal's configuration must be performed via Omnicomm Configurator program.

Omnicomm Configurator

1. Connect the Terminal to the personal computer with a USB cable. 2. Install and run the Omnicomm Configurator. You will be taken to the following screen:

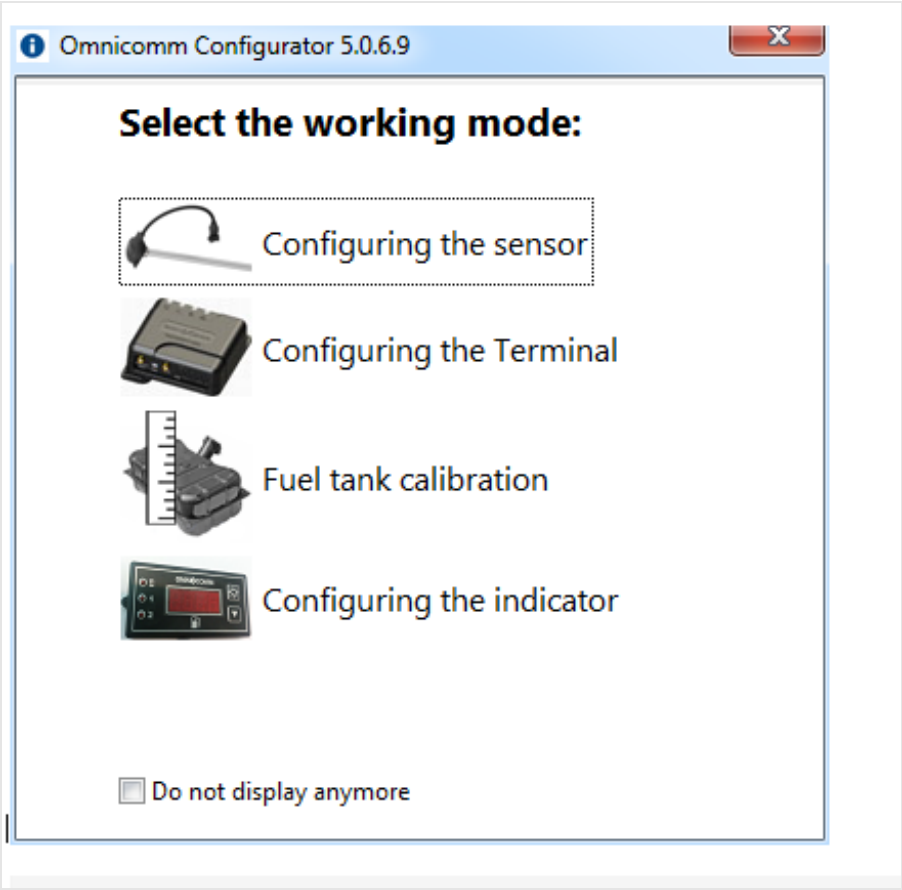

3. Select the 'Configuring the Terminal' operation mode.

Remote Configuration Server (RCS)

Open your browser and enter 'http://config.omnicomm.ru:9911/#en' in the URL bar to connect to the configuration server. Then, the window will open.

Configuring Operational Parameters

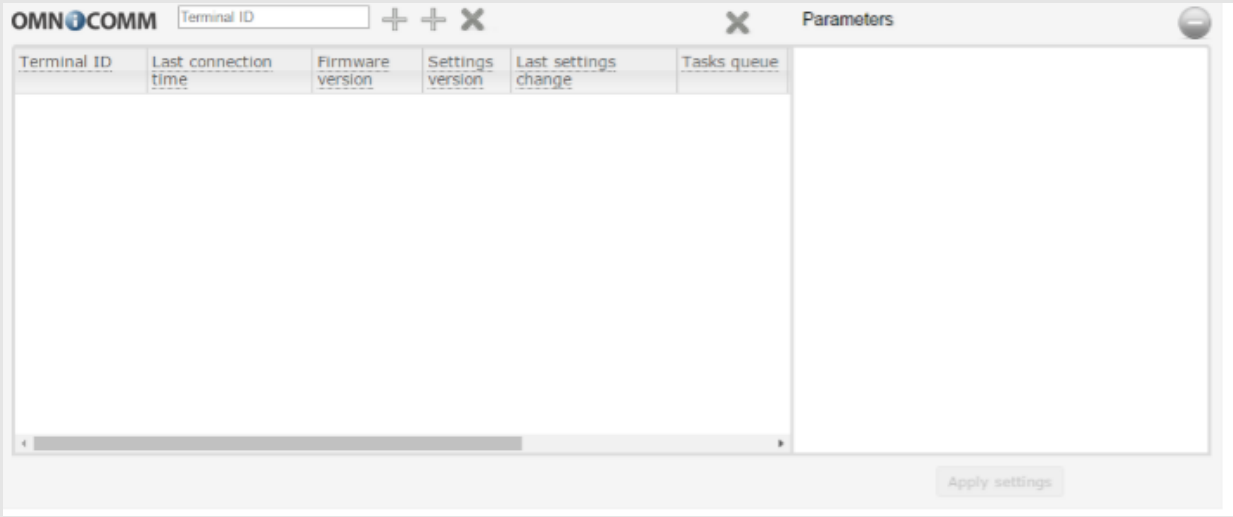

To add the terminal, do the following:

1. Enter the Terminal's identification number in the 'Terminal ID' field.

2. Enter the password that you selected for the Terminal when configuring it via the Omnicomm Configurator in the 'Password' field.

3. Click on the '+' button.

Configuring Operational Parameters

GPRS Connection

Open the “Settings” menu and select the 'Connection' tab. Now refer to “GPRS Settings”:

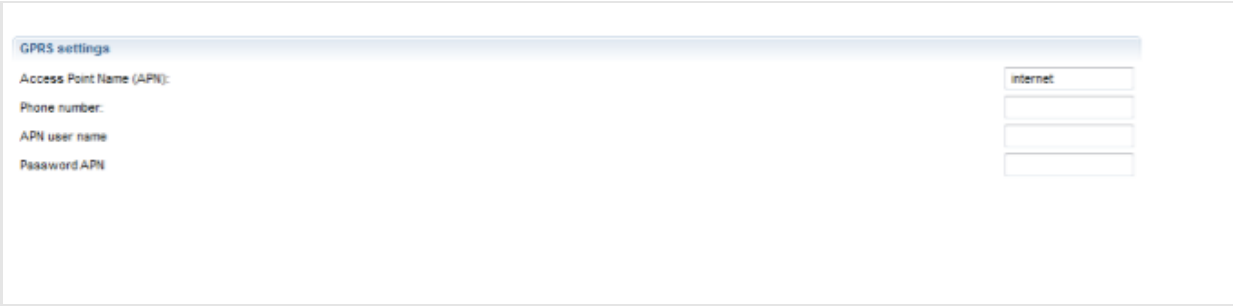

"Access Point Name (APN)": enter the name of the GPRS access point:

- internet (default)

Please enquire from your provider, whose SIM card is installed in the Terminal, of the appropriate GPRS access point name.

"Phone number": this stands for the telephone number associated with the SIM card installed in the Terminal.

"APN user name" and "APN Password": Enter your login details for the access point if you're required to do so. Login details are provided along with the SIM card by selected mobile network providers.

Collecting Data

Now refer to "Data Collection Parameters":

Collecting Data

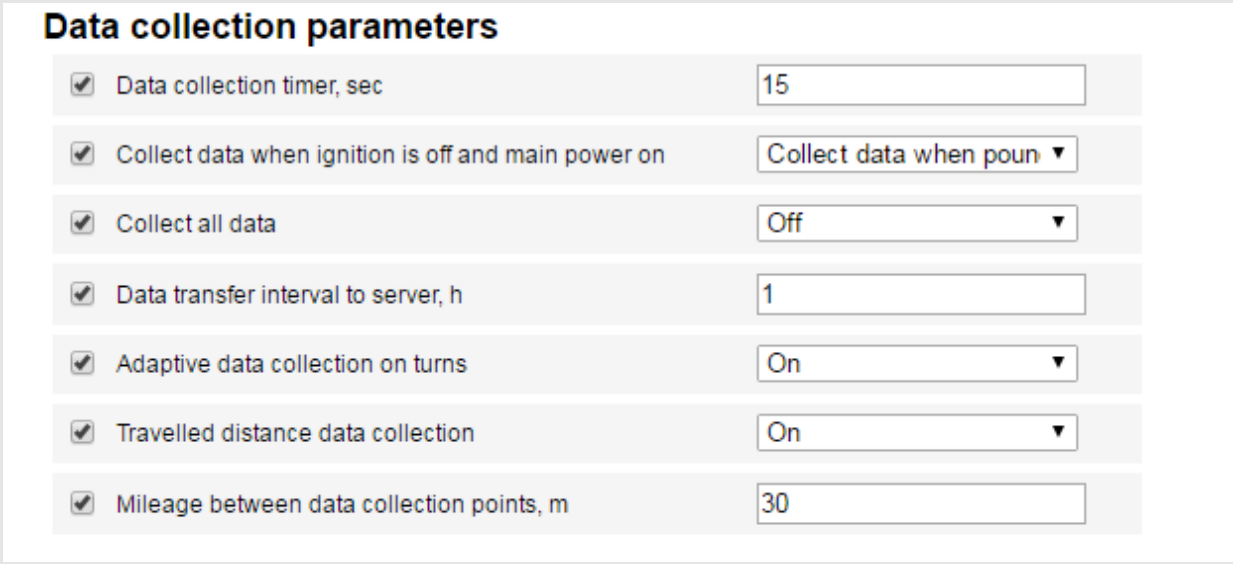

Collection Timer — set up the value for the polling period for the Terminal, its connected modules and external devices. The available value range is from 15 to 240 seconds.

Go to the “Operation Mode for Ignition Off and Power On” and select one of the following:

- “Collect all data”, collecting and transmitting data in the same manner as when the ignition is on.
- “Collect all data except GPS”, collecting and transmitting data selected during the Terminal configuration, except for the GPS module data.
- “Collect Data during jolting”, monitoring the state of the panic button and accelerometer. When the accelerometer readings change by more than 0.2 g, or when the panic button is pressed, the Terminal switches to 'Collect All Data' mode and proceeds to transmit data to the Communication Server for the next 5 minutes.

When selecting “Collect all data during jolting”, configure the following settings:

- “Collect all data”, with this parameter enabled, the Terminal switches to “Collect all data” mode and collects and transmits data to the communication server when the time entered in the “Period of Data Transmission to Server” expires. Having transmitted all available data, the Terminal reverts to “Collect data during jolting” mode.
- Period of data transmission to server, select the time interval in between the Terminal's connection sessions to the server. The available values range from 1 to 6 hours at 1-hour increments.

Speed source selection

Depending on the mode selected, data is collected from pre-specified modules and external devices.

“Adaptive data collection during turns”, enable or disable collecting data when the vehicle makes a turn; enabling it helps increase the accuracy of recording and displaying turns on the map. This is done by collecting additional data from the GPS module more frequently than the “Collection Timer” parameter suggests.

“Collecting data on distance travelled” allows increasing the accuracy of tracking the vehicle location and therefore displaying it on the map. This is done by collecting additional data from the GPS module on the distance travelled between registered events with set coordinates.

“Distance Travelled”, enter the value of the distance travelled from the last registered event with set coordinates that must be reached to initiate data collection. The values range from 10 to 1,000.

Speed source selection

Please refer to the “Vehicle speed” section.

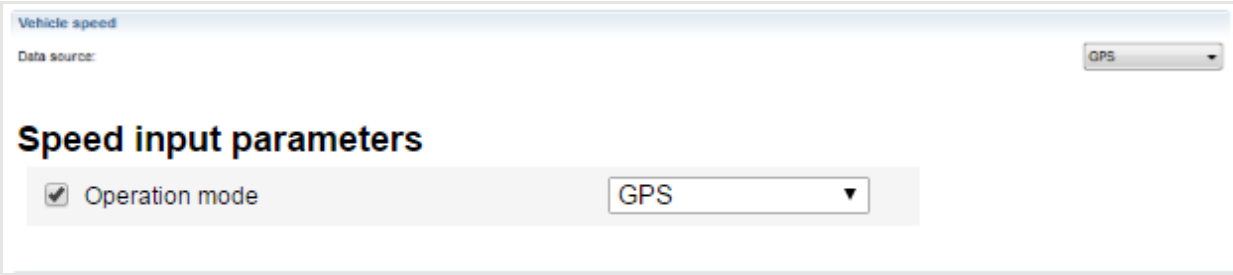

In “Data source” section please select what data should be used to calculate vehicle speed values. You can choose between GPS and CAN bus.

Communication Server Connection

In the section “Connection establishing parameters”:

Speed source selection

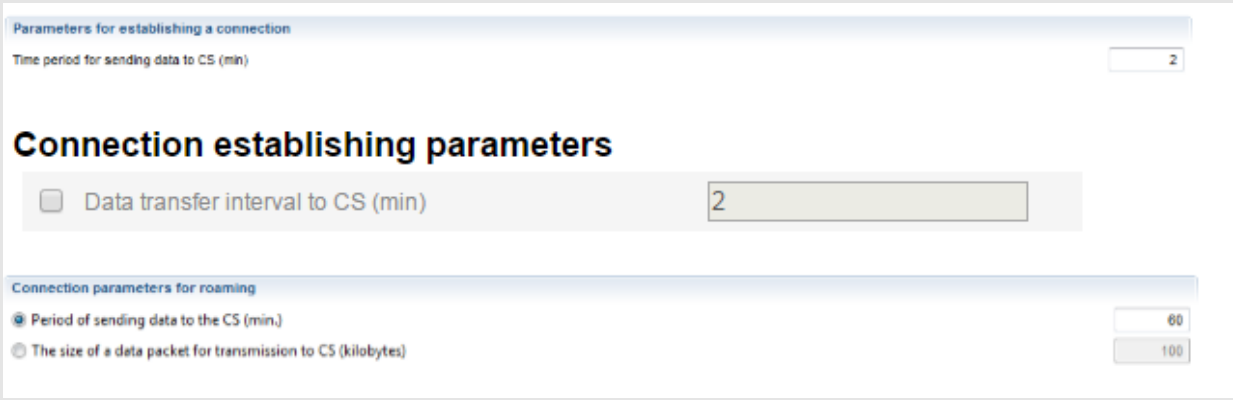

"Period of sending data to the CS", enter the number of minutes, upon expiry of which, the Terminal shall connect to the communication server when within the home network of your mobile network provider. The recommended value is 10 minutes.

Now refer to the "Roaming parameters":

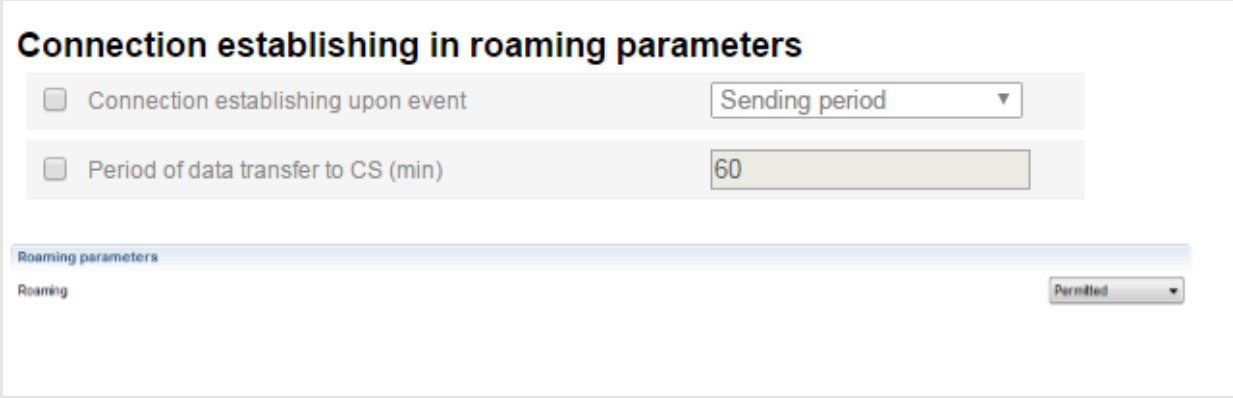

Roaming: Select one of the roaming options for your SIM card: 'Permitted', 'Disable', or 'According to the list'. To enable SIM card operation "According to the list in roaming" please enter MCC and MNC cellular networks to the Omnicomm Configurator.

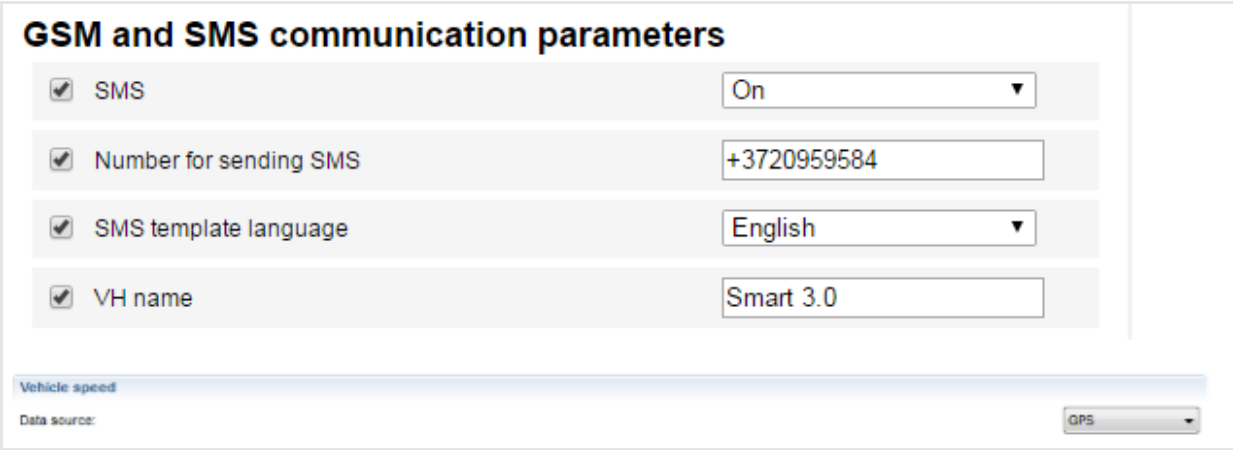

"SMS", switch on/switch off receipt of orders via SMS and sending of information

messages by the Terminal. With the “SMS” parameter on, specify the following:

“Number for sending SMS”, select a telephone number to which the SMS with information on the Terminal and VH status.

“SMS template language”, select a language of the SMS template. You can select Russian, English, Spanish or Portuguese.

“Vehicle name”, please enter the vehicle name. This field is mandatory to fill in.

Ignition key status

Please refer to “Ignition Key Status”:

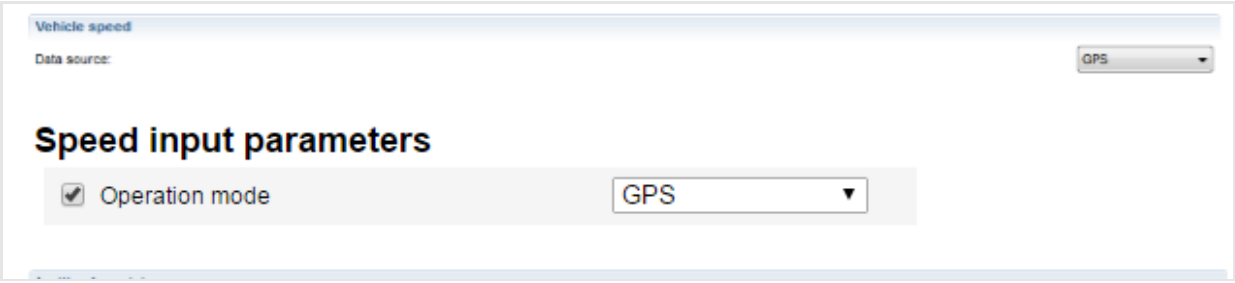

“Data source”, select the data that should be used to record the events of ignition being switched on or off. Here are the available options: “Ignition key”, this records the ignition being switched on or off by evaluating the position of the ignition key, given actual connection to the ignition key.

“On-Board Network Voltage”, this records the ignition being switched on or off by evaluating whether the on-board network voltage has reached a pre-configured threshold value. Select the “Threshold Voltage” value in order to define the on-board network voltage value that should trigger recognising the ignition state as “On”. The ignition “Off” state gets recognised as soon as the on-board network voltage falls at least 0.5 V below the threshold value.

Engine RPM

In the “Engine revolutions” section:

Ignition key status

In the “Data source” select a type of signal. You can choose one of the following options:

- Off - Ignition key - CAN bus - RPM input

Calibrating RPM Input in Omnicomm Configurator

Start the vehicle engine. Adjust the engine rotations to ensure that the RPM rate is stable throughout the calibration process. Open the 'Inputs' tab and click on 'Calibrate'. You will be taken to the following screen:

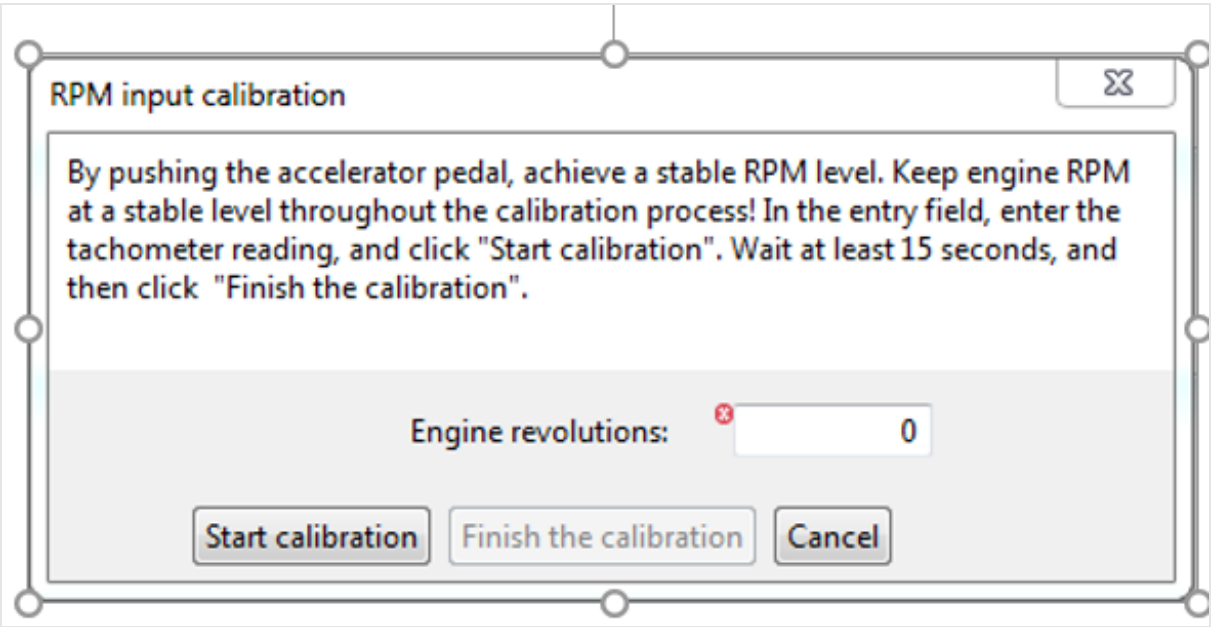

In the “Engine RPM”, enter the number of engine revolutions according to the tachometer readings. Launch the calibration by clicking on the “Start Calibration” button. Wait for 15 seconds, and then click on the “Finish the calibration” button. The Omnicomm Configurator will determine the recalculation coefficient automatically. Save the recalculation coefficient in the Terminal by clicking on the “Record” button. Connect your tachometer to Smart Terminal according to the figure below:

Accelerometer

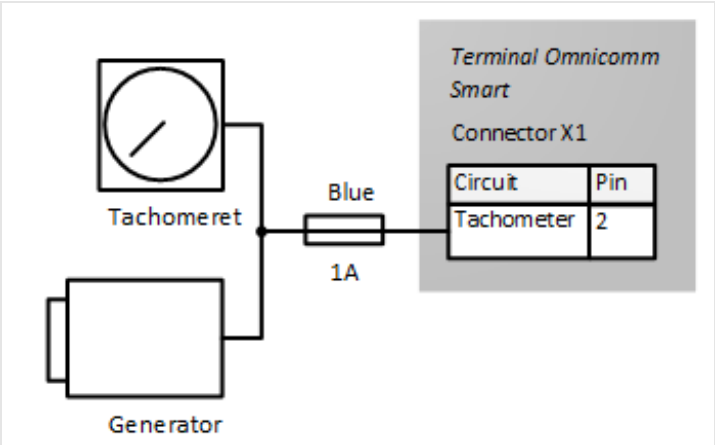

The tachometer's point of connection must be one in the vehicle's electrical network where the impulse signal frequency is proportional to the engine RPM rate.

Accelerometer

Open the “Settings” menu and select the “Additional Equipment” tab:

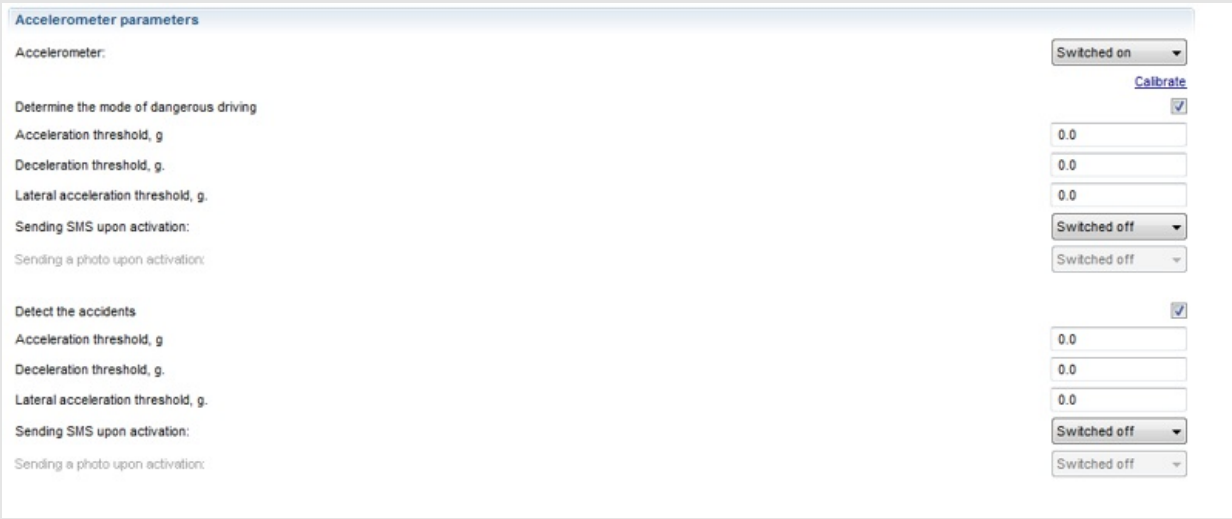

Accelerometer

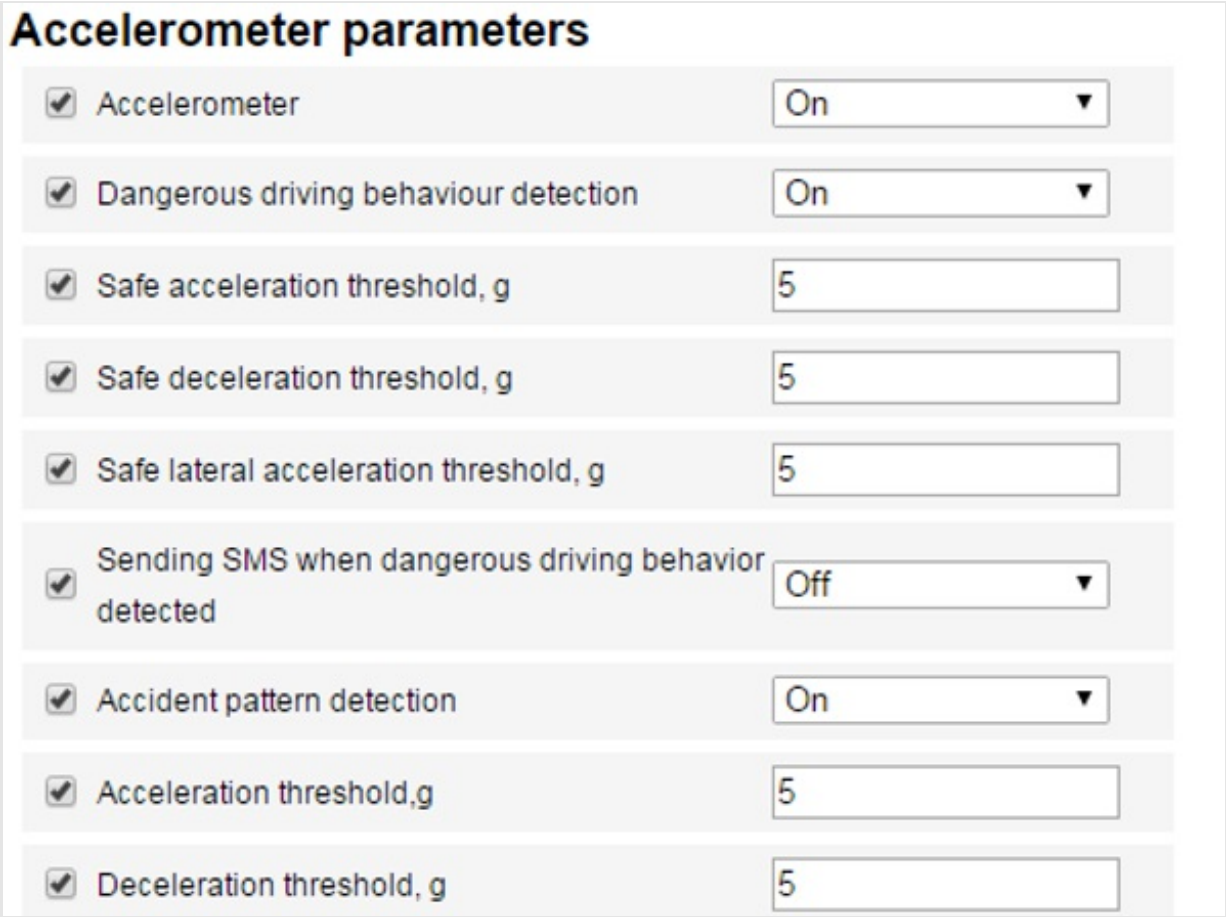

Accelerometer Parameters: Enable or disable these to switch the use of the accelerometer on or off in order to measure vehicle acceleration. “Dangerous driving detection” enable or disable to engage or disengage the evaluation of dangerous driving whenever pre-configured thresholds are exceeded.

If you choose to enable “Detect Dangerous Driving”, you will need to configure the following parameters: “Acceleration Threshold”, select the acceleration value during speeding up which must be exceeded to recognise the driving manner as dangerous.

“Slowdown threshold”, select the acceleration value during braking which must be exceeded to recongnise the driving manner as dangerous.

“Lateral acceleration threshold”, select the acceleration value during turning manoeuvres which must be exceeded to recongnise the driving manner as dangerous.

- Outgoing SMS Messages: Enable or disable outgoing SMS text messages whenever dangerous driving manner is recognised.

- Send Photo Upon Activation: Enable or disable outgoing digital photos whenever dangerous driving manner is recognised.

Utility Functions

Restarting Terminal

Open the “Terminal” tab from the Omnicomm Configurator menu and select the “Restarting Terminal” option.

Setting Up Password for Configuring Parameters

Open the “Settings” menu and select the “Additional Equipment” tab. Now refer to “Configuring password”:

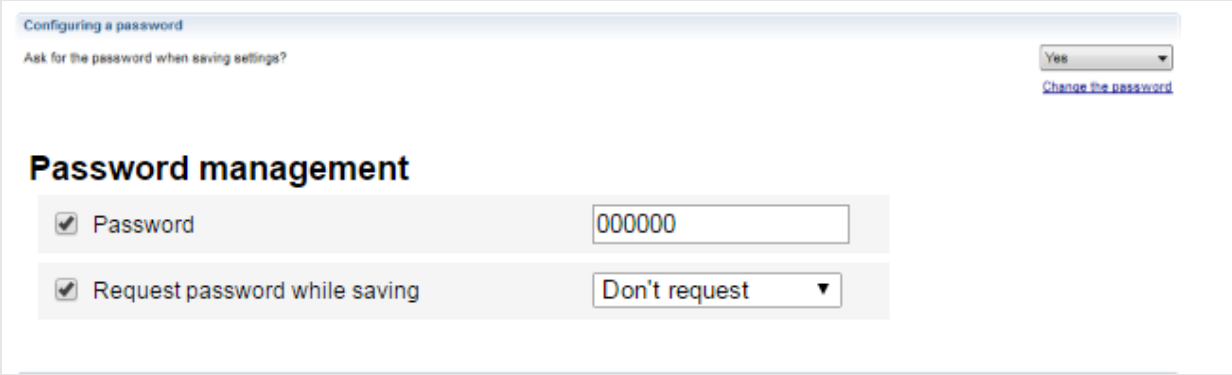

If you want to use a password for configuring the Terminal settings, select “Yes” as an answer to the “Ask for password when saving configurations?” field. Password, enter the password that will be used for access to settings configurations. The password must contain at least 8 characters.

Operational Set-up For Remote Configuration Server

You can set up the password for reconfiguring Terminal settings in either of the two ways: - Set up password for reconfiguring Terminal settings in the Omnicomm Configurator that is different from the default password. The default password is just an empty line.

- Send the following SMS command to update the default factory password: *SETPWDID 235009988 12345#“

where '235009988' is the Terminal ID; '12345' is the new password you want to use.

The password must contain at least 8 characters and may include any numbers or letters. However, you cannot update a previously amended password in the same manner. It will take the Terminal 6 hours to authenticate with the Remote Configuration Server and become available for any further operations via the Remote Configuration Server.

Identifying Terminal's SIM Card Number

The Terminal's SIM card telephone number is displayed automatically in the Remote Configuration Server after the second established connection to the server. The SIM card must have outgoing SMS text messages enabled.

Additional equipment

Fuel level sensors

In the settings open “Inputs” tab.

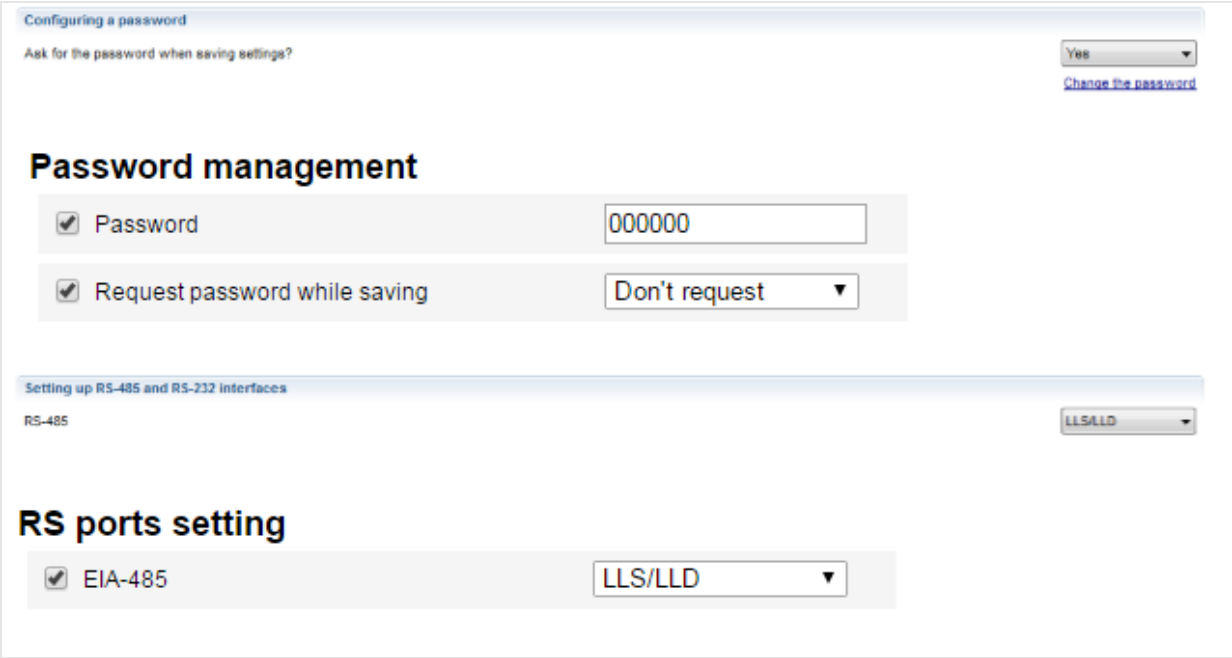

Select the following values for RS-485 interfaces:

- Off: The interface is not in use.

Identifying Terminal's SIM Card Number

- Omnicomm LLS/LLD: The interface is used to connect Omnicomm LLS fuel level sensors or Omnicomm LLD fuel volume indicator.

Now refer to “Fuel Level Sensors”:

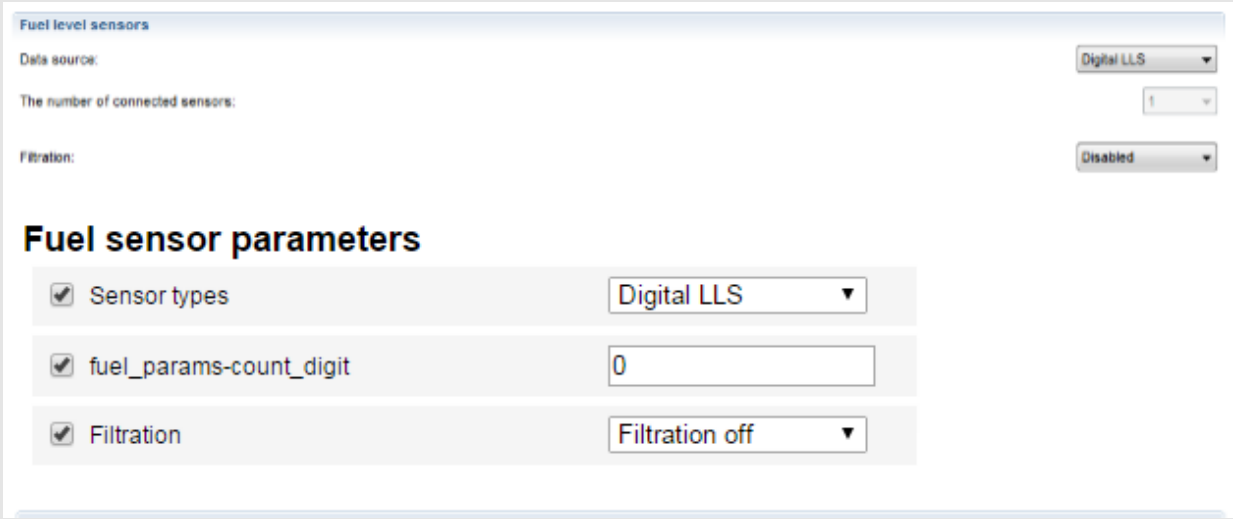

Data Source: Select the type of fuel level sensors. Here are the available options:

- Digital LLS: This is for Omnicomm LLS fuel level sensors;

- Frequency LLS-AF: This is for Omnicomm LLS-AF fuel level sensors;

- Vehicle Sensor: This is for the vehicle's standard factory fuel sensor;

- CAN Bus: This is for connecting to the CAN bus;

- Off: Select this option if you do not need to monitor your fuel level.

“If you are connecting either Omnicomm LLS or Omnicomm LLS-AF fuel level sensors, you will need to configure the following parameters:

- Filters: Enter the size of the internal filter you intend to use. Here are the available filter options:

- Filters Off: Filtering is performed only according to the Omnicomm LLS sensor settings;

- Weak: Use it when installing sensors in stationary fuel storage objects or low-mobility equipment;

- Medium: Use it for vehicles that operate under normal road conditions;

- Strong: Use it for vehicles that operate under normal and heavy road conditions;

- Maximum: Use it for vehicles that operate under heavy road conditions and/or when employing a vehicle's default factory fuel sensor with analog output.

Connect the Omnicomm LLS 30160 fuel level sensor according to the figure below:

Identifying Terminal's SIM Card Number

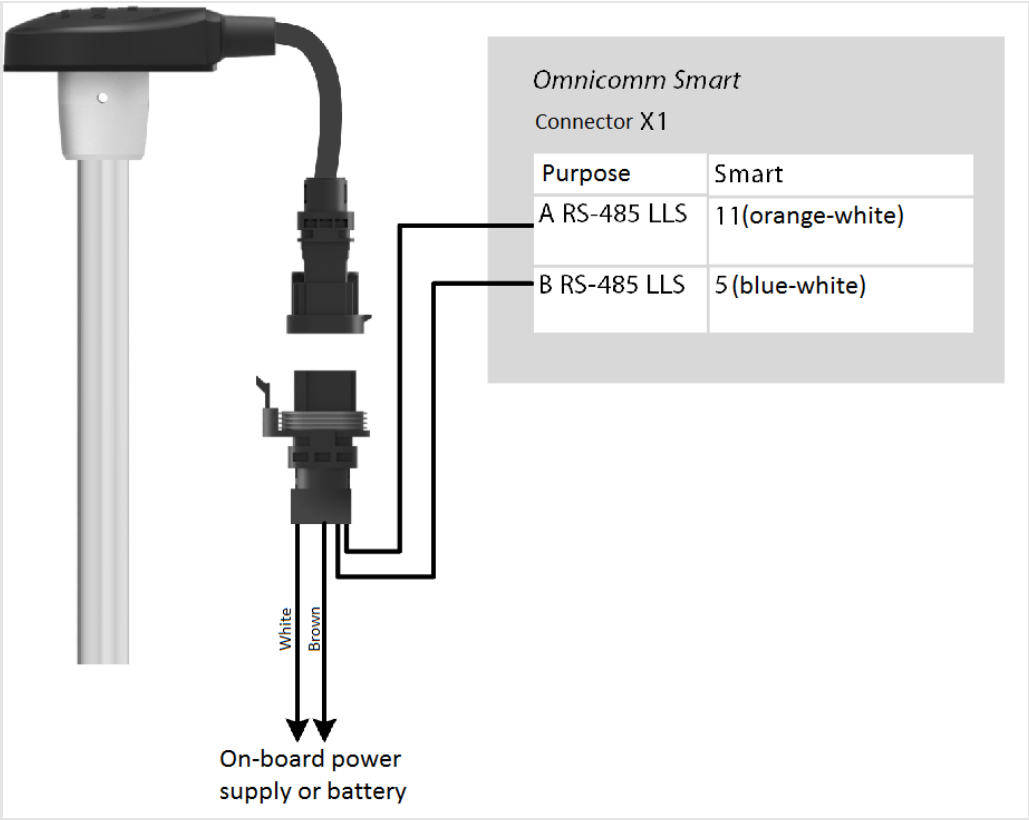

Connect the Omnicomm LLS 20310 fuel level sensor according to the figure below:

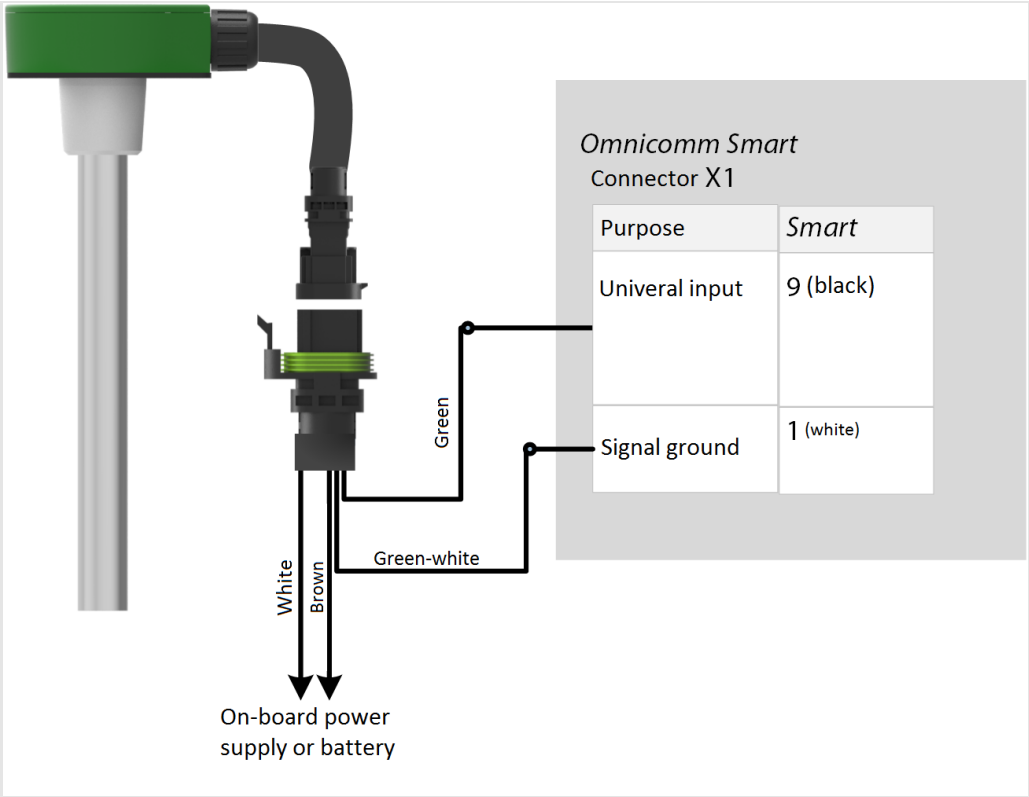

Omnicomm LLS-AF 20310 fuel level sensor shall be configured to deliver the frequency signal in the range from 30 to 1053 Hz.

Universal Inputs

Universal inputs (UIs) are designed to connect additional equipment with impulse, voltage, analog, or frequency outputs and monitor its operations.

Open the “Settings” menu and select the 'Inputs' tab; then go to 'Universal Inputs':

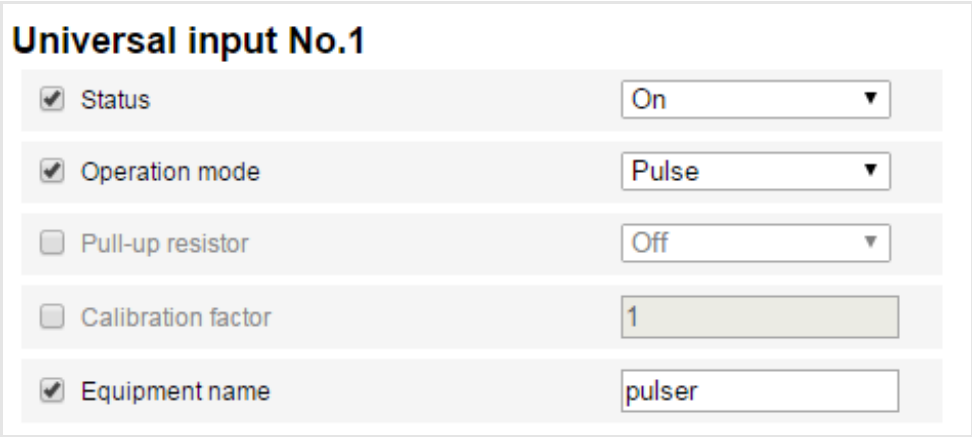

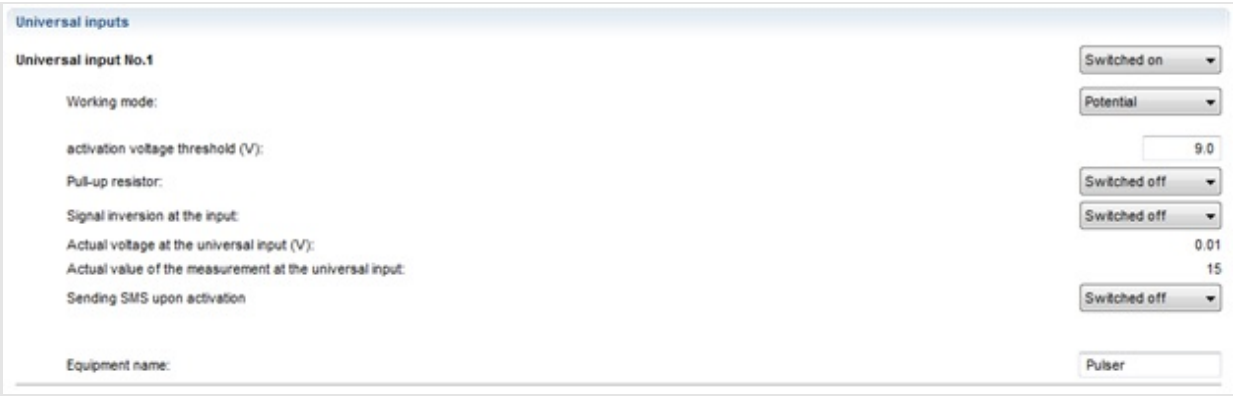

“Universal input”, select “On”.

“Operation mode”, select “Potential”.

“Transmit 1-Wire Sensor Values Instead of UI Values”, check this box if you need to transmit data from additional equipment connected via the 1-Wire interface.

“Potential input switching-on voltage threshold”, select the voltage threshold value that must be reached by the Terminal to record the sensor as “On”. The default value is 9 V.

“Pullup”, select “On”, if you're working with “open collector” or contact type sensors.

“Invert Input Signal”, select “On” for sensors with open contacts or contacts that lock as a

result of a specific action or event.

“Current Voltage”, displays the Terminal's universal input voltage value.

“Current Value”, displays if the additional equipment is on or off.

“Send SMS upon triggering”, select “On”, if you want the Terminal to send SMS text messages when a voltage universal input is activated.

“Equipment name”, enter a parameter controlled.

Potential types of sensors: contact or non-contact discrete sensors.

Connect contactless sensors (capacity, induction, optical or magnetic) and N-P-N type sensors with 'open collector' output according to the figure below:

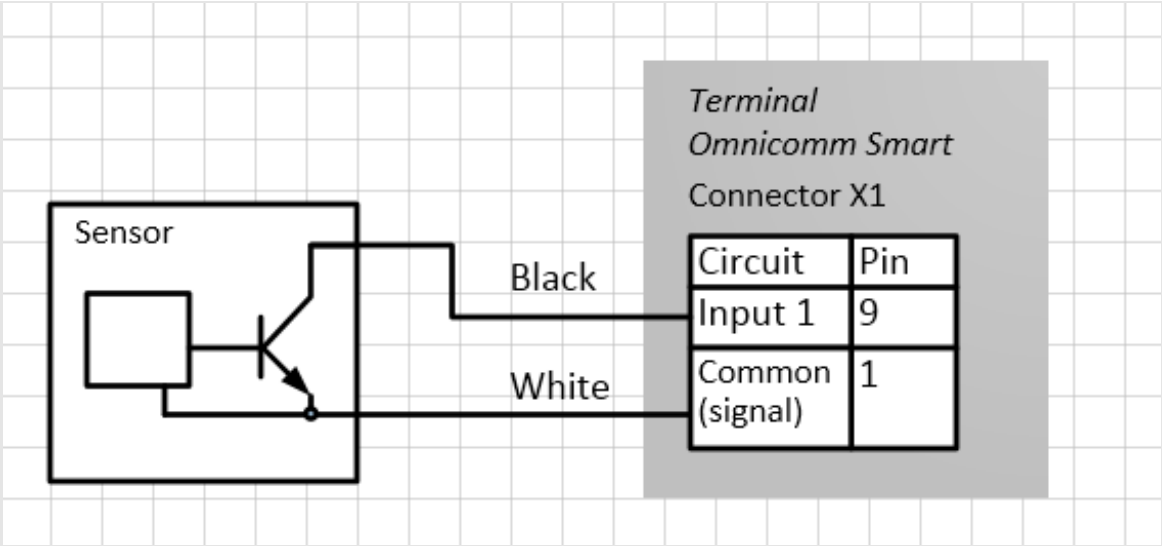

Connect contact sensors according to the figure below:

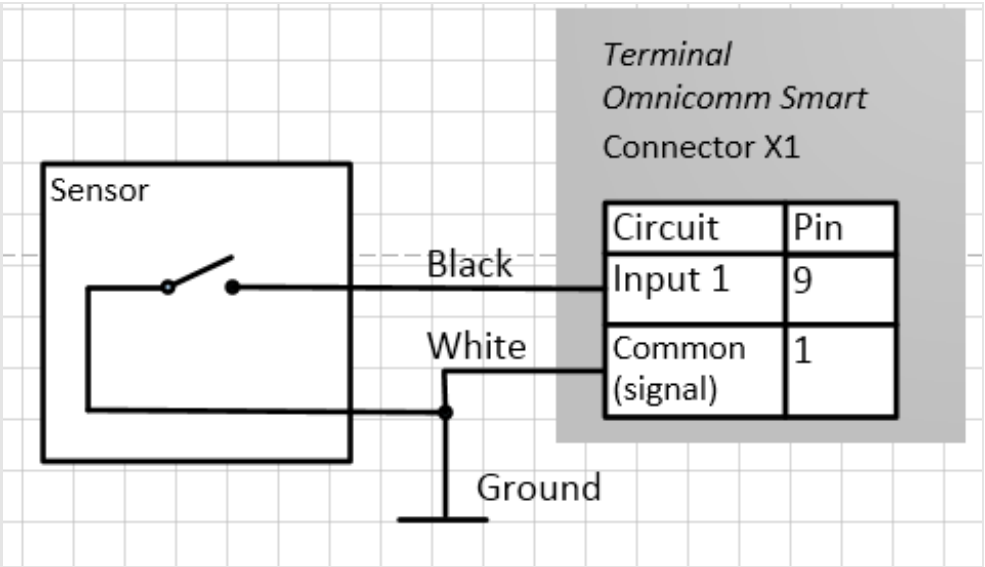

Universal Inputs

You can use standard factory equipment elements (such as on/off buttons, end switches/sensors that are activated by changes in temperature or pressure values, etc.) as contact sensors, or any additionally installed sensors. We recommend to first examine your options of connecting to a standard device or element, and only installing an additional sensor in case that this is not possible.

Sensors with analogue output:

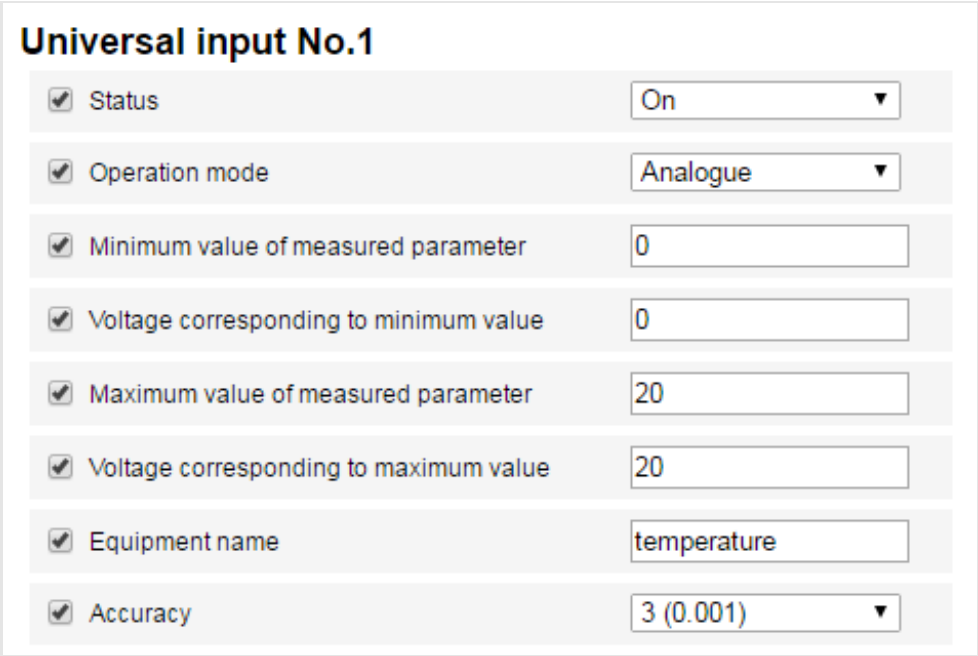

Measured Variable Minimum Value, set the minimum value for the variable measured by the sensor, defined in appropriate units. Voltage Associated With Minimum Value, set the voltage value that should be associated with the minimum value of the measured variable. Measured Variable Maximum Value, set the maximum value for the variable measured by the sensor, defined in appropriate units.

Voltage Associated With Maximum Value, set the voltage value that should be associated with the maximum value of the measured variable.

Current Universal Input Voltage, displays voltage value at Terminal's universal input.

Universal Inputs

Current Universal Input Value, displays current value of the measured variable.

Equipment Name, enter the name of the monitored parameter.

Types of analogue sensors:

Standardised current output

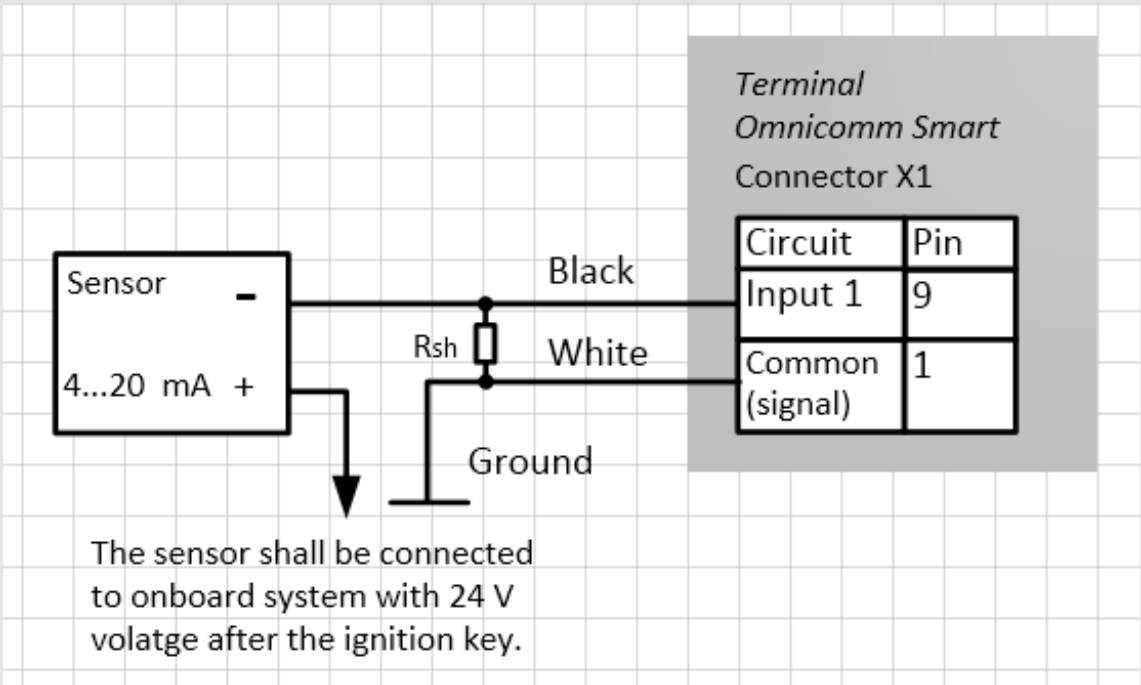

Standardised voltage output

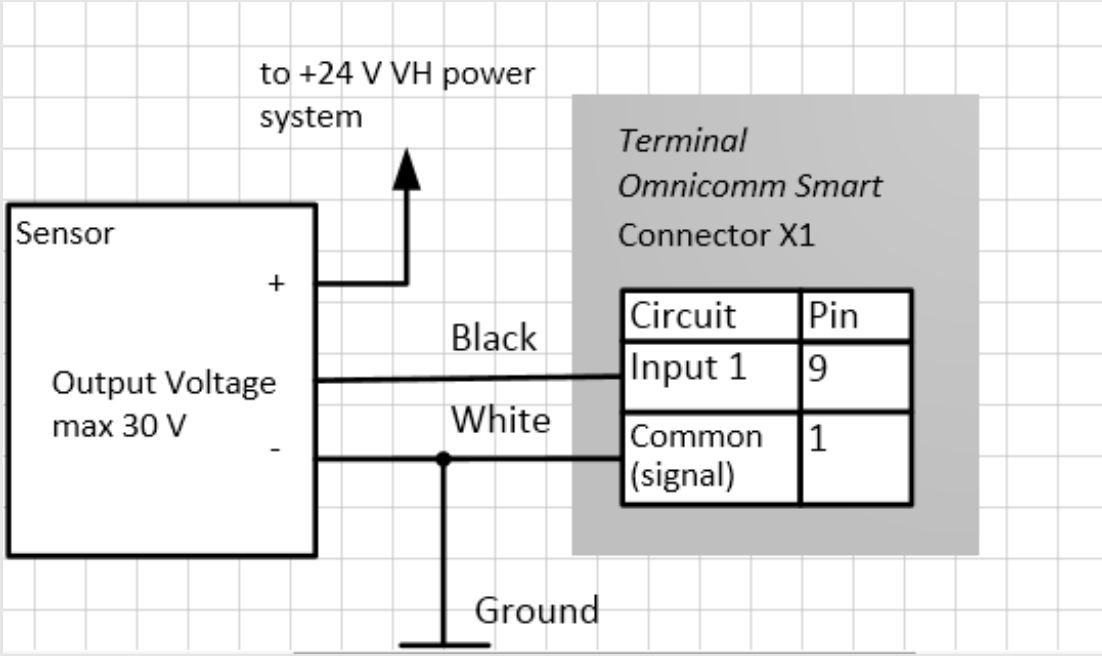

Sensors with frequency output

Universal Input, select “On”.

Operation Mode, select “Frequency”.

“Transmit 1-Wire Sensor Values Instead of UI Values”, check this box if you need to transmit data from additional equipment connected via the 1-Wire interface. This will prevent data transmission from the universal input.

“Pull-up”, select “On” if you're working with “open collector” or contact type sensors.

Current Universal Input Value, displays the current value of the measured variable.

Omnicomm LLD Indicator

Open the “Settings” menu and select the “Additional Equipment” tab:

Panic Button

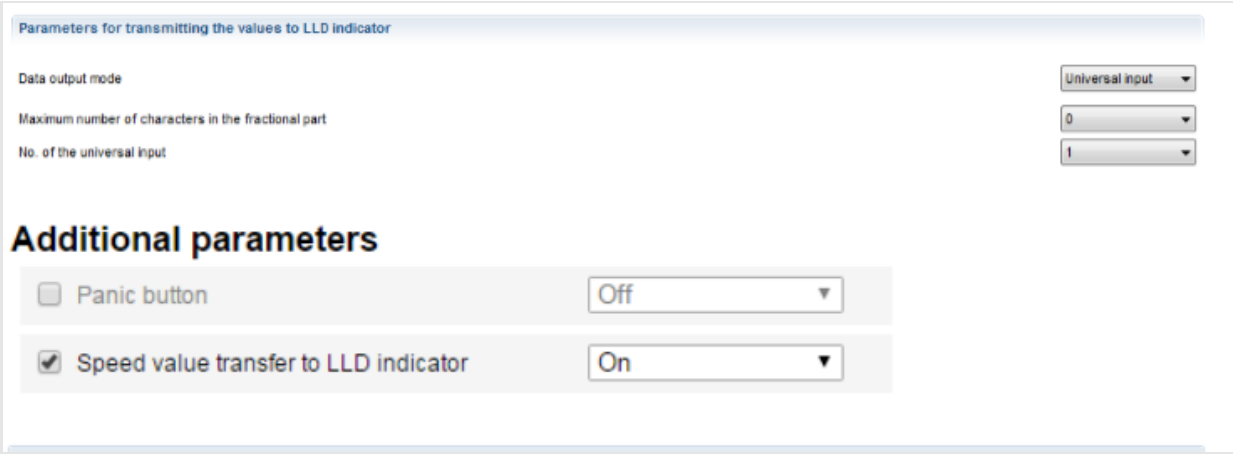

Data Mode, select the data source that should be used to display values on the Omnicomm LLD indicator.

Here are the available options:

- GPS Speed Tracking, displays vehicle speed.

- Universal Input, displays state of or value at the Terminal's universal input, depending on the additionally connected equipment.

Panic Button

Open the “Settings” menu and select the “Additional Equipment” tab:

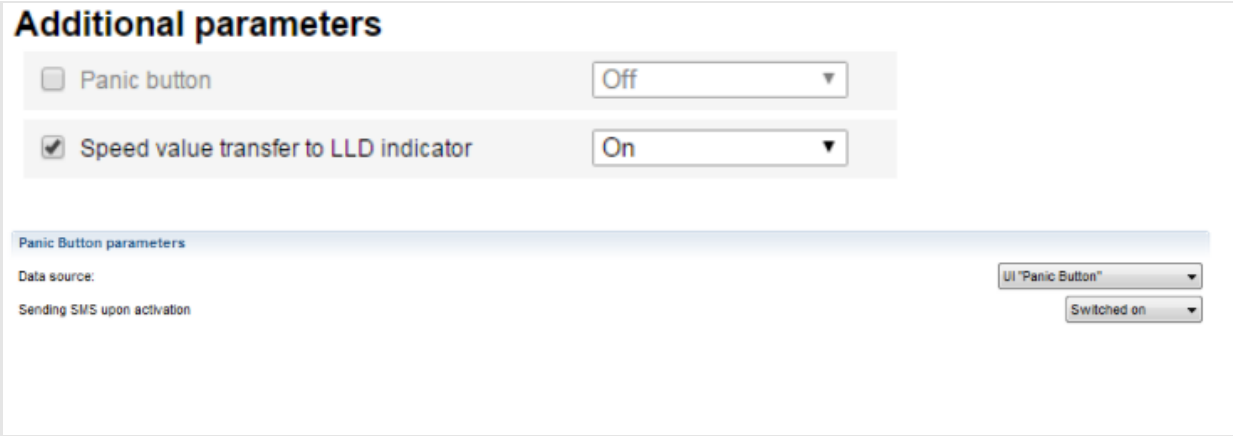

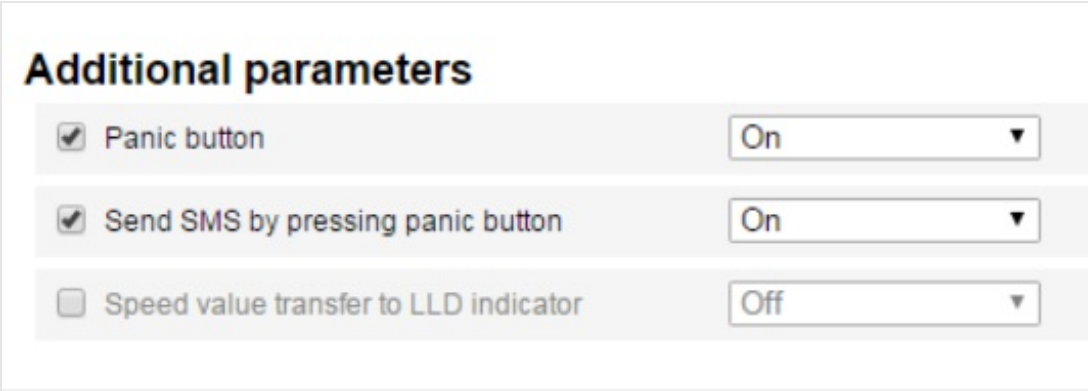

Panic Button, enable or disable monitoring the panic button state.

Send SMS Messages Upon Activation: Enable or disable outgoing SMS text messages whenever the panic button is pressed.

Connect the panic button according to the figure below:

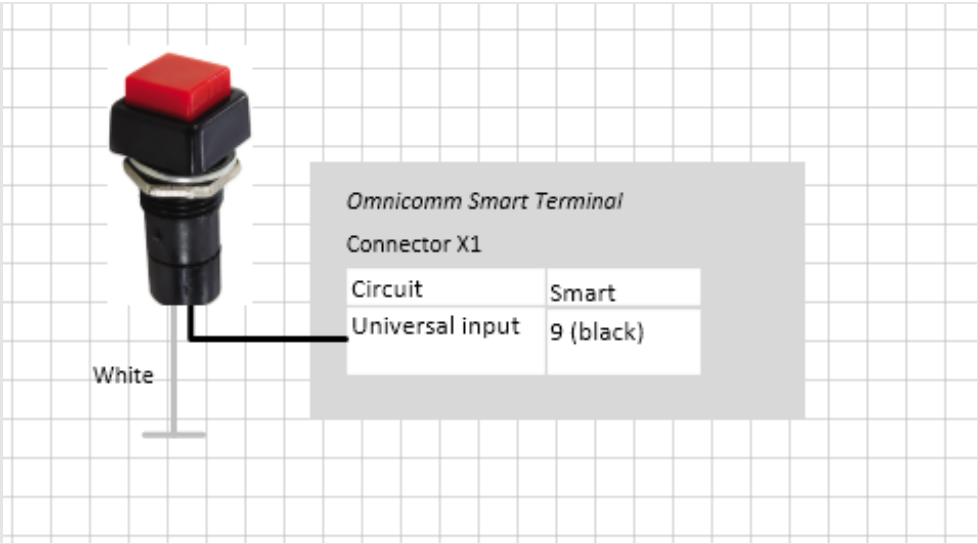

The panic button shall be installed on the vehicle's front panel, or anywhere inside the vehicle cabin that is convenient for use. Once you've chosen the installation place, drill a 12-mm hole, mount the button and secure it with a ring and a tab washer.

CAN bus

Open the “Settings” menu and select the “CAN” tab:

CAN bus

Monitor | Settings | Save

Connection | Inputs | Auxiliary equipment | CAN

Add | Change | Delete

	No.	Length	PGN	Offset (b...	SPN	Actual value	To use
	1	Parking brake status	65265	2	70	Disabled in the Terminal settings	
	2	Accelerator pedal position	61443	8	91	Disabled in the Terminal settings	
	3	Engine oil pressure	65263	24	100	Disabled in the Terminal settings	
	4	Engine coolant temperature	65262	0	110	Disabled in the Terminal settings	
	5	Fuel temperature	65262	8	174	Disabled in the Terminal settings	
	6	Engine oil temperature	65262	16	175	Disabled in the Terminal settings	
	7	Daily fuel consumption	65257	0	182	Disabled in the Terminal settings	
	8	Instantaneous fuel economy	65266	16	184	Disabled in the Terminal settings	
	9	Engine revolutions	61444	24	190	Disabled in the Terminal settings	
	10	Daily mileage	65248	0	244	Disabled in the Terminal settings	
	11	Total mileage	65248	32	245	Disabled in the Terminal settings	
	12	Total engine runtime	65253	0	247	Disabled in the Terminal settings	
	13	Total fuel consumption during the total time	65257	32	250	Disabled in the Terminal settings	
	14	Brake pedal position	61441	8	521	Disabled in the Terminal settings	
	15	Clutch pedal position	61442	24	522	Disabled in the Terminal settings	
	16	Cruise control status	65265	53	527	Disabled in the Terminal settings	
	17	Axle load	65258	8	582	Disabled in the Terminal settings	
	18	Brake pedal status	65265	28	597	Disabled in the Terminal settings	
	19	Clutch pedal status	65265	30	598	Disabled in the Terminal settings	
	20	Mileage before the next routine maintenance	65216	8	914	Disabled in the Terminal settings	
	21	Engine runtime before the next routine maintenance	65216	48	916	Disabled in the Terminal settings	
	22	Axis index	65258	0	928	Disabled in the Terminal settings	
	23	Instantaneous velocity	65132	48	1624	Disabled in the Terminal settings	
	24	State of doors	65102	1	1821	Disabled in the Terminal settings	
	25	State of safety belts	57344	30	1856	Disabled in the Terminal settings	

CAN bus

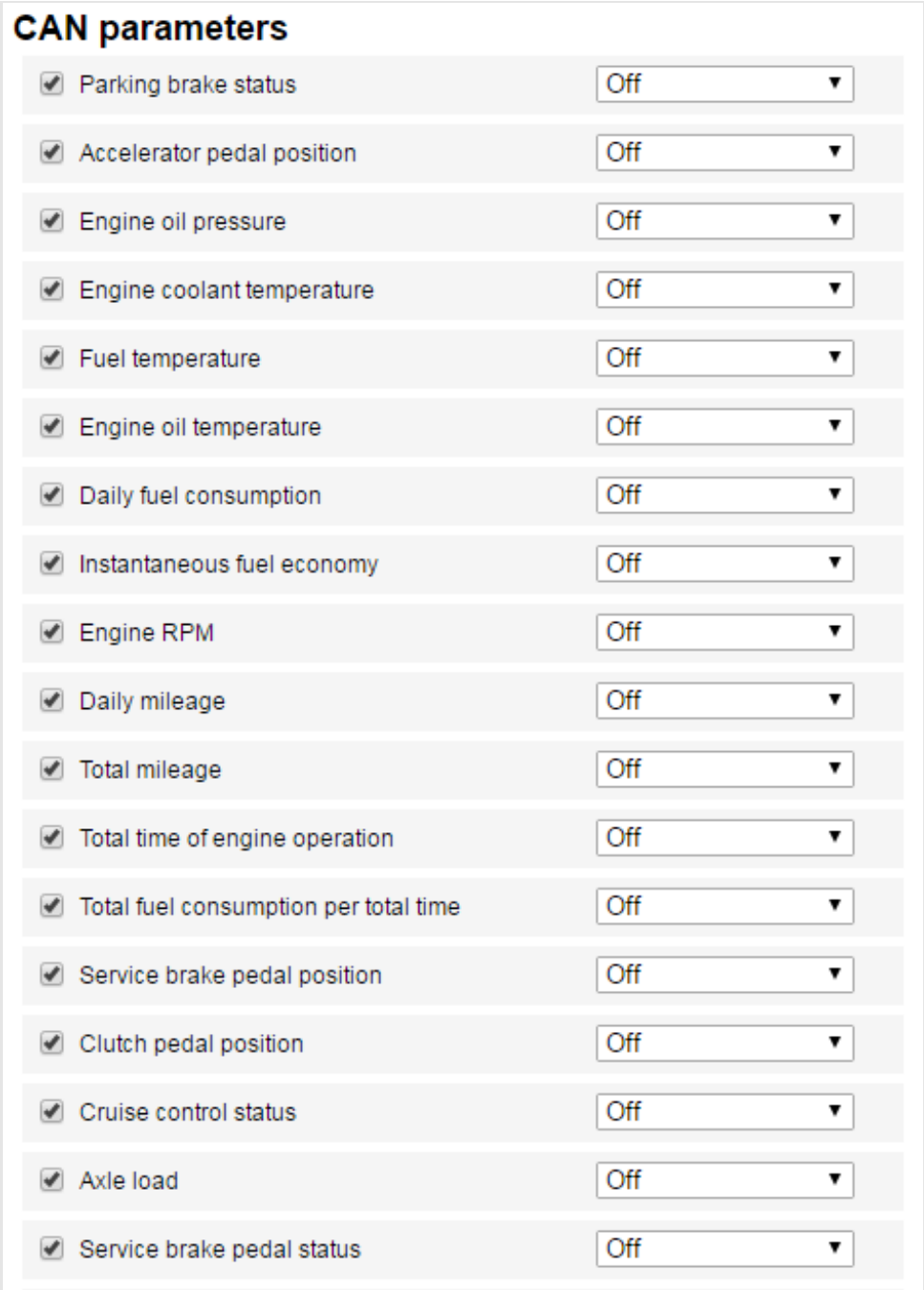

CAN parameters

☑ Parking brake status	Off
☑ Accelerator pedal position	Off
☑ Engine oil pressure	Off
☑ Engine coolant temperature	Off
☑ Fuel temperature	Off
☑ Engine oil temperature	Off
☑ Daily fuel consumption	Off
☑ Instantaneous fuel economy	Off
☑ Engine RPM	Off
☑ Daily mileage	Off
☑ Total mileage	Off
☑ Total time of engine operation	Off
☑ Total fuel consumption per total time	Off
☑ Service brake pedal position	Off
☑ Clutch pedal position	Off
☑ Cruise control status	Off
☑ Axle load	Off
☑ Service brake pedal status	Off

Refer to the list and select the parameters whose values you need to display in Omnicomm Online by ticking the box in the 'Use' column appropriately. If you need to add parameter readings from the CAN bus that are missing from this list, go to Omnicomm Configurator and click on 'Add'. You will be taken to the following screen:

CAN bus

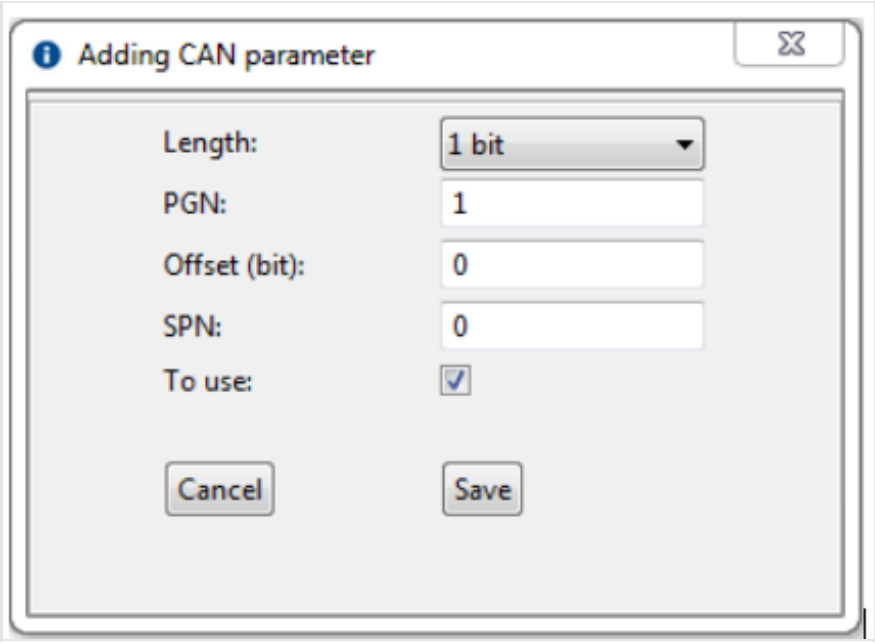

Length: Select the data packet length. Here are the available options: 1, 2, 3, or 4 bits; 1, 2, or 4 bytes.

PGN: Enter the parameter group number that determines the content of each specific message according to SAE J1939. You can choose a number from 1 to 262,143.

Offset: Enter the offset value in relation to the basic address of the bit storage area. You can choose values from 0 to 63.

SPN: Enter the parameter code according to SAE J1939. You can choose between values from 0 to 4,294,967,295.

Use: Check if you want the read this parameter from the CAN bus.

Click on “Save”.

Connect to the vehicle's CAN bus via the wireless CAN reader (or CAN alligator clip).

When using wireless CAN readers, connect the Terminals according to the diagram below:

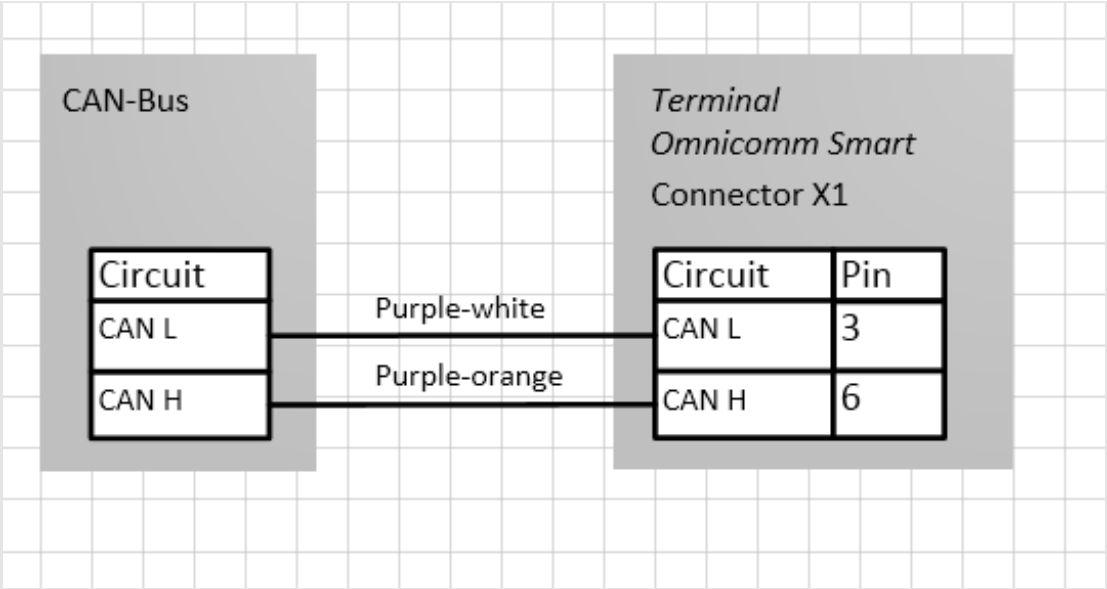

Use the “Monitoring” tab to check how the fuel sensor readings are displayed; the available value range is from 0 to 4,095.

If you choose to obtain data on fuel volume in the tank from CAN bus readings, select the “Collect Data During Joilting” Terminal operation mode for the event of ignition “Off”.

Otherwise, the fuel chart will display inaccurate information.

Technical Specifications

	Omnicomm Smart
Connection	
Satellite Navigation Systems	GLONASS/GPS
Data transmission channel	GPRS
Number of SIM card and SIM chips	1 SIM card
SIM chip installing option	No

Technical Specifications

	Omnicomm Smart
Connection	
Data collection and transfer	
Data collection period, sec	15…240
Nonvolatile data memory (events)	150 000
	Omnicomm Smart
Inputs and outputs	
Ignition key input	Yes
RPM sensor input	Yes
Number of universal inputs	Yes
Interfaces	
CAN interface	Yes
RS-485 interface	Yes
USB interface	Yes
Built-in accelerometer	Yes
Body	
Dimensions, mm	101.0 x 90.0 x 31.5

	Omnicomm Smart
Connection	
Operational temperature range, °C	– 40…+85
Body-opening sensor	No
Antenna type	Buit-in
Features	
Fuel level sensors connection	1
Remote GPRS control	Yes
Data output via external indicator	Yes
SMS notifications	Yes

SMS commands

SMS commands for Terminal configuration

Command	Function	
Command text in SMS message	Reply to SMS command	

SMS commands

Command	Function	
Command text in SMS message	Reply to SMS command	
*CONNECT#	CONNECT url_CS:port	Request to establiish connection between the Terminal and the CS
*GETLINK#	LINK ip4_url_CS:port date_and_time	Enquiry on state of connection to the CS
*GETINFO#	INFO DID=device ID HW=code_hardware_version BL=loader_version FW=wiring_version REC=number_of_archived_records IMEI=unique_identificator_of_GSM_modem	Enquiry on the terminal state
*RESET#	RESET param Possible parameter readings: param = OK (when command is sent) param = ER (when no command is sent)	Restarting the Terminal

SMS commands

Command	Function	
Command text in SMS message	Reply to SMS command	
*GETSTAT#	STAT Terminal_date_and_time GPS=GPS coordinates SPD=speed IGN=state_of_ignition L1=fuel_level:sensor_state … L6=fuel_level:sensor_state LLS/LLS-AF fuel level sensor state codes: 0 - sensor off; 1 - sensor not ready; 2 - sensor ready, frequency of 20 to max. Hz; 3 - error, frequency of 0 to 19 Hz	Request to check vehicle state
*SETPWDID vid pwdid# vid is the Terminal's ID, pwdid is password/identificator	SETPWDID ERRID/ERRNulPWD/ERRAlrSet/PWD:pwdid OK	Setting the “password” parameter
*CONNECTSC#	RESET param Possible parameter readings: param = OK (when command is sent) param = OK (when command is sent) param = ER (when no command is sent)	Enquiry on establishing connection of the terminal with the configuration server
*SETAPN apn# apn – operator's APN	SETAPN apn ERR/OK	APN installation
*GPSCOLD#	GPSCOLD ERR/OK	Cold start of GPS receiver

OMNICOMM

info@omnicomm-world.com
www.omnicomm-world.com